# → Series 601

## 601

**Pressure relief valves made of gunmetal, with lever and weight, angle-type with threaded connections**

### SUITABLE FOR

| | | |
|---|---|---|
| Liquids | neutral | |
| Air, gases and vapours | neutral | |
| Steam | | |

### EXAMPLES OF USE

For the protection of:
- pressure tanks/-systems for neutral vapours, gases and liquids
- steam boilers and steam plants

if proportional opening characteristics and only small blow-off volumes are required (i.e. protection in the case of expansion due to heating-up). Please observe plant-specific regulations and use of appropriate valve version and sealing material.

- Industrial and commercial boilers

### APPROVALS

**European Pressure Equipment Directive**

**TR ZU 032/2013 - TR ZU 010/2011**

**Requirements**
PED 2014/68/EU

### MATERIAL

### SPECIFICATION

1/2" – 2"

– 60°C to + 225°C
depending on version

1,5 – 16 bar
depending on version

### MATERIALS

| Component | Material | DIN EN | ASME |
|---|---|---|---|
| Inlet body | Gunmetal | CC499K | CC499K |
| Outlet body | Gunmetal | CC499K | CC499K |
| Internal parts | Brass / Gunmetal | CW617N / CC499K | CW617N / CC499K |
| Lever | Stainless steel | 1.4301 | 304 |

| | | |
|---|---|---|
| **s** | Standard, non-gastight version | for neutral media without counter pressure.<br>With lever and weight(s) |

## ■ MEDIUM

| | | |
|---|---|---|
| **GF** | gaseous and liquid | Air, vapours, gases, liquids and - depending on seal - also for steam |

## ■ TYPE OF LIFTING MECHANISM

| | |
|---|---|
| **L** | Lifting by lever. Disc can be lifted and turned. |

## ■ AVAILABLE NOMINAL DIAMETERS AND CONNECTION SIZES

| **Nominal diameter DN** | | **15** | **20** | **25** | **32** | **40** | **50** |
|---|---|---|---|---|---|---|---|
| **Inlet** | | 1/2“ (15) | 3/4“ (20) | 1“ (25) | 1 1/4“ (32) | 1 1/2“ (40) | 2“ (50) |
| **Outlet** | 1/2“ (15) | ■ | | | | | |
| | 3/4“ (20) | | ■ | | | | |
| | 1“ (25) | | | ■ | | | |
| | 1 1/4“ (32) | | | | ■ | | |
| | 1 1/2“ (40) | | | | | ■ | |
| | 2“ (50) | | | | | | ■ |

## ■ TYPE OF CONNECTION INLET / OUTLET THREADED CONNECTIONS

| | | | |
|---|---|---|---|
| **f / f** | Standard | Female thread BSP-P / Female thread BSP-P | DIN EN ISO 228-1 / DIN EN ISO 228-1 |

## ■ SEALS

| | | | |
|---|---|---|---|
| **NBR** | Nitrile rubber | Elastomere flat seal | –30°C to +130°C |
| **PTFE** | Polytetrafluoroethylene | Flat seal | –60°C to +225°C |

## NOMINAL DIAMETERS, CONNECTIONS, INSTALLATION DIMENSIONS

| Series 601: Connection, installation dimensions, ranges of adjustment | | | | | | | |
|---|---|---|---|---|---|---|---|
| **Nominal diameter** | **DN** | **15** | **20** | **25** | **32** | **40** | **50** |
| **Connection DIN EN ISO 228** | **G** | 1/2" (15) | 3/4" (20) | 1" (25) | 1 1/4" (32) | 1 1/2" (40) | 2" (50) |
| **Outlet DIN EN ISO 228** | **G** | 1/2" (15) | 3/4" (20) | 1" (25) | 1 1/4" (32) | 1 1/2" (40) | 2" (50) |
| **Installation dimensions in mm** | **L** | 250 | 300 | 380 | 500 | 490 | 600 |
| | **l** | 30 | 30 | 40 | 50 | 50 | 65 |
| | **H** | 74 | 85 | 100 | 115 | 120 | 150 |
| | **h** | 30 | 35 | 41 | 45 | 51 | 60 |
| | **SW** | 28 | 34 | 41 | 52 | 58 | 70 |
| | **do** | 13 | 19 | 25 | 30 | 38 | 50 |
| **Weight der Armatur** | **kg** | 0,47 | 0,69 | 1,2 | 1,86 | 2,3 | 3,75 |
| **Counterweight standard** | **kg** | 0,67 | 1,36 | 2,2 | 2,2 | 3,55 | 6,5 |
| **Range of adjustment[1]** | **bar** | 2 - 6 | 2 - 6 | 2 - 6 | 1,5 - 4 | 1,5 - 4 | 1,5 - 4 |

[1]Depending on nominal diameter the valves are also available up to 12 bar or 16 bar against surcharge. See table counterweights.

## MAIN DIMENSIONS, INSTALLATION DIMENSIONS

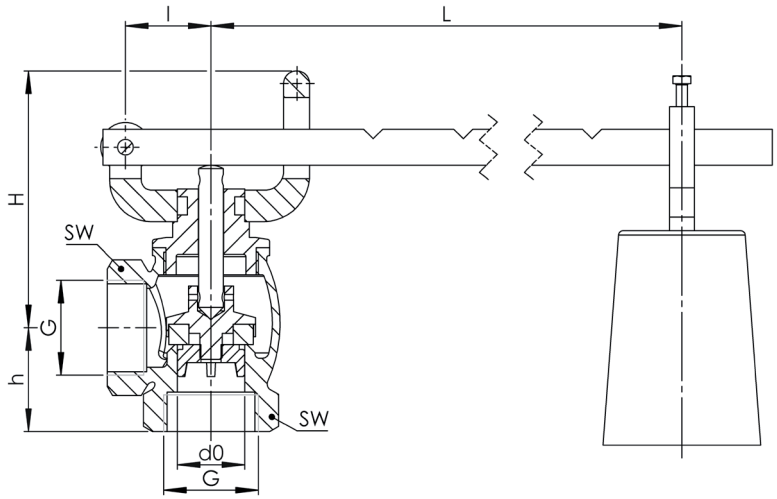


## INDIVIDUAL SELECTION / VALVE CONFIGURATION

| Series | Valve version | Medium | Lifting device | Nominal diameter DN | Connection type | | Connection size | | Seal | Options | Pressure range / set pressure | Quantity |
|---|---|---|---|---|---|---|---|---|---|---|---|---|
| | | | | | Inlet | Outlet | Inlet | Outlet | | | | |
| **601** | **s** | **GF** | **L** | *50* | **f** | **f** | *50* | *50* | *PTFE* | | *1,5 - 4,0* | *5* |
| **601** | **s** | **GF** | **L** | | **f** | **f** | | | | | | |
| **601** | **s** | **GF** | **L** | | **f** | **f** | | | | | | |
| **601** | **s** | **GF** | **L** | | **f** | **f** | | | | | | |

## ENQUIRY

Copy and send to: order@goetze-armaturen.de.
Order form easily to be found online under the section for each series.

## CAPACITY TABLE

**Series 601: Blowing-off rates at approx. 10% above set pressure**

| Nominal diameter DN | | 15 | | | 20 | | | 25 | | | 32 | | | 40 | | | 50 | | |
|---|---|---|---|---|---|---|---|---|---|---|---|---|---|---|---|---|---|---|---|
| Set pressure bar | | I | II | III | I | II | III | I | II | III | I | II | III | I | II | III | I | II | III |
| | 0,5 | 6 | 5 | 0,2 | 13 | 21 | 0,5 | 24 | 19 | 0,8 | 33 | 27 | 1,1 | 54 | 44 | 1,9 | 98 | 77 | 3,3 |
| Air I | 1 | 8 | 6 | 0,3 | 18 | 28 | 0,6 | 32 | 26 | 1,2 | 44 | 36 | 1,6 | 72 | 58 | 2,6 | 130 | 102 | 4,7 |
| Nm³/h | 1,5 | 10 | 8 | 0,4 | 22 | 34 | 0,8 | 40 | 32 | 1,4 | 55 | 45 | 2,0 | 90 | 72 | 3,2 | 163 | 127 | 5,8 |
| | 2 | 24 | 19 | 0,8 | 52 | 41 | 1,8 | 96 | 75 | 3,3 | 132 | 100 | 4,6 | 217 | 170 | 7,4 | 390 | 300 | 13,3 |
| Steam II | 2,5 | 28 | 22 | 0,9 | 61 | 48 | 2,0 | 112 | 87 | 3,7 | 154 | 116 | 5,1 | 253 | 197 | 8,3 | 455 | 348 | 14,9 |
| kg/h | 3 | 32 | 25 | 1,0 | 70 | 54 | 2,2 | 128 | 99 | 4,0 | 176 | 132 | 5,6 | 289 | 225 | 9,1 | 520 | 397 | 16,3 |
| | 3,5 | 36 | 28 | 1,1 | 79 | 61 | 2,4 | 144 | 111 | 4,4 | 198 | 148 | 6,0 | 325 | 252 | 9,8 | 585 | 444 | 17,6 |
| Water III | 4 | 40 | 31 | 1,2 | 87 | 67 | 2,6 | 160 | 123 | 4,7 | 220 | 164 | 6,4 | 362 | 279 | 10,5 | 650 | 492 | 18,8 |
| m³/h | 4,5 | 44 | 34 | 1,2 | 96 | 74 | 2,7 | 176 | 135 | 5,0 | 242 | 180 | 6,8 | 398 | 306 | 11,1 | 715 | 540 | 19,9 |
| | 5 | 48 | 37 | 1,3 | 105 | 80 | 2,9 | 192 | 147 | 5,2 | 264 | 196 | 7,2 | 434 | 333 | 11,7 | 780 | 588 | 21,0 |
| | 5,5 | 52 | 40 | 1,4 | 114 | 87 | 3,0 | 208 | 159 | 5,5 | 286 | 212 | 7,5 | 470 | 360 | 12,3 | 845 | 635 | 22,0 |
| | 6 | 56 | 43 | 1,4 | 122 | 93 | 3,2 | 224 | 171 | 5,7 | 308 | 228 | 7,9 | 506 | 387 | 12,9 | 910 | 684 | 23,0 |
| | 6,5 | 60 | 46 | 1,5 | 131 | 100 | 3,3 | 240 | 183 | 6,0 | 330 | 243 | 8,2 | 542 | 414 | 13,4 | 975 | 731 | 24,0 |
| | 7 | 64 | 49 | 1,6 | 140 | 106 | 3,4 | 256 | 194 | 6,2 | 352 | 259 | 8,5 | 578 | 440 | 13,9 | 1040 | 777 | 24,9 |
| | 7,5 | 68 | 52 | 1,6 | 149 | 113 | 3,5 | 272 | 206 | 6,4 | 374 | 275 | 8,8 | 615 | 467 | 14,4 | 1105 | 825 | 25,7 |
| | 8 | 72 | 55 | 1,7 | 157 | 119 | 3,7 | 288 | 218 | 6,6 | 396 | 291 | 9,1 | 651 | 494 | 14,9 | 1170 | 872 | 26,6 |
| | 8,5 | 76 | 58 | 1,7 | 166 | 126 | 3,8 | 304 | 230 | 6,8 | 418 | 306 | 9,4 | 687 | 521 | 15,3 | 1235 | 919 | 27,4 |
| | 9 | 80 | 61 | 1,8 | 175 | 132 | 3,9 | 320 | 242 | 7,0 | 440 | 322 | 9,7 | 723 | 548 | 15,8 | 1300 | 966 | 28,2 |
| | 9,5 | 84 | 64 | 1,8 | 184 | 138 | 4,0 | 336 | 253 | 7,2 | 462 | 338 | 9,9 | 759 | 574 | 16,2 | 1365 | 1014 | 29,0 |
| | 10 | 88 | 70 | 1,9 | 193 | 150 | 4,1 | 355 | 275 | 7,4 | 487 | 380 | 10,2 | 787 | 620 | 16,6 | 1411 | 1060 | 29,7 |
| | 11 | 96 | 76 | 1,9 | 211 | 163 | 4,3 | 388 | 299 | 7,7 | 531 | 414 | 10,7 | 858 | 675 | 17,4 | 1539 | 1154 | 31,2 |
| | 12 | 104 | 82 | 2,0 | 228 | 176 | 4,5 | 420 | 323 | 8,1 | 575 | 447 | 11,2 | 930 | 729 | 18,1 | 1667 | 1247 | 32,6 |
| | 13 | 112 | 89 | 2,1 | 246 | 189 | 4,7 | 452 | 348 | 8,4 | 619 | 481 | 11,7 | 1001 | 784 | 18,8 | 1796 | 1341 | 33,9 |
| | 14 | 120 | 95 | 2,2 | 263 | 203 | 4,9 | 485 | 372 | 8,7 | 663 | 514 | 12,1 | 1073 | 839 | 19,6 | 1924 | 1435 | 35,2 |
| | 15 | 128 | 101 | 2,3 | 281 | 216 | 5,0 | 517 | 396 | 9,1 | 708 | 548 | 12,5 | 1144 | 894 | 20,2 | 2052 | 1528 | 36,4 |
| | 16 | 136 | 107 | 2,3 | 298 | 229 | 5,2 | 549 | 420 | 9,4 | 752 | 582 | 12,9 | 1216 | 949 | 20,9 | 2180 | 1622 | 37,6 |

## COUNTERWEIGHT

**Series 601: Counterweight**

| Nominal diameter | DN | 15 | 20 | 25 | 32 | 40 | 50 |
|---|---|---|---|---|---|---|---|
| Pressure range | Weight, kg | | | | | | |
| 1,5 - 4 bar | | - | - | - | 2,2 | 3,55 | 6,5 |
| 2 - 6 bar | | 0,67 | 1,36 | 2,2 | 3,55 | 4,75 | 9 |
| 3 - 8 bar | | 0,67 | 1,36 | 3,55 | 4,75 | 9 | - |
| 4 - 10 bar | | 0,67 | 2,2 | 3,55 | 4,75 | 9 | - |
| 4 - 12 bar | | 1,36 | 2,2 | 4,75 | 4,75 | 9 | - |
| 5 - 15 bar | | 1,36 | 2,2 | 4,75 | 9 | - | - |
| 6 - 16 bar | | 1,36 | 2,2 | 4,75 | 9 | - | - |